TWA052_SVC

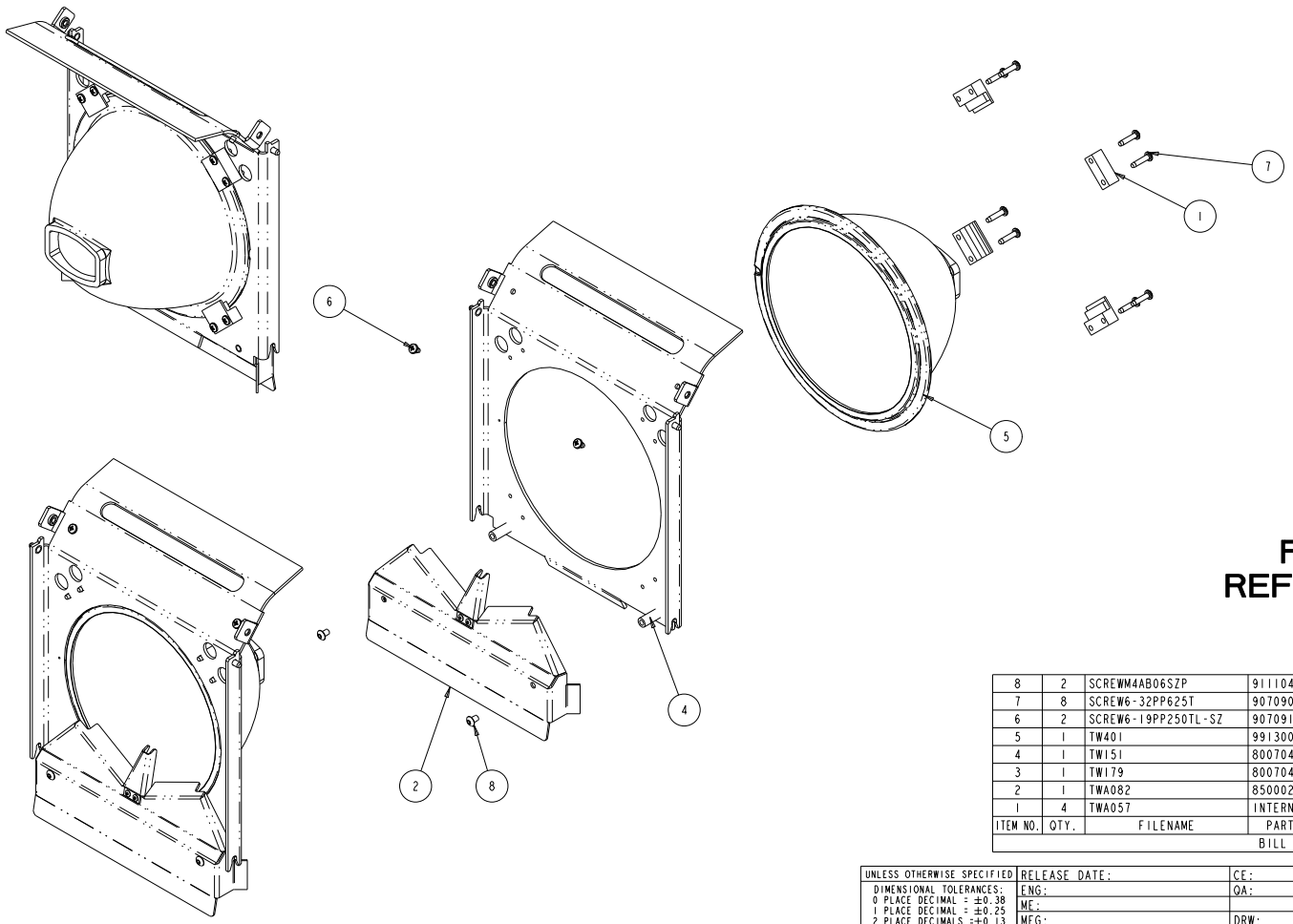

FOR SERVICE REFERENCE ONLY

ITEM NO.	QTY.	FILENAME	PART NO.	DESCRIPTION
8	2	SCREWM4AB06SZP	91110406	SCREW,M4 BUTTON 06 SS W/PATCH
7	8	SCREW6-32PP625T	90709017	SCREW,6-32 PHIL PAN 5/8 TYPE 23 SZ
6	2	SCREW6-19PP250TL-SZ	90709123	SCREW,6-19 PHIL PAN 1/4 SZ PLASTITE
5	1	TW401	99130022	REFLECTOR, FACETED
4	1	TW151	80070450	PLATE,MOUNTING,REFLECTOR SG
3	1	TW179	80070458	PLATE, LIGHT BLOCK, REFLECTOR SG
2	1	TWA082	85000262	DEFLECTOR ASM, LAMP HOUSING SG
1	4	TWA057	INTERNAL	CLAMP, REFLECTOR ASM SG

BILL OF MATERIALS

UNLESS OTHERWISE SPECIFIED
DIMENSIONAL TOLERANCES:
0 PLACE DECIMAL = ±0.38
1 PLACE DECIMAL = ±0.25
2 PLACE DECIMALS = ±0.13
ANGLES = ±0.5°

FOR PAINTED PARTS REFER TO ENG. SPEC. MANUAL WI-0592

ALL COMPONENTS, MATERIALS AND FINISHES TO BE RoHS COMPLIANT

MIN. DRAFT	
MIN. RADII	
FLATNESS	
THICKNESS	
VOLUME	

RELEASE DATE: | CE:
ENG: | QA:
ME:
MFG: | DRW:

High End systems®
2105 GRACY FARMS LANE
AUSTIN, TEXAS 78758
(512) 836-2242
FAX (512) 832-4128
http://www.highend.com
LIGHTWAVE RESEARCH

DESCRIPTION: REFLECTOR, ASM, COMPLETE, SG

MATERIAL: CHARTED

FINISH: NA

INTERPRET DIMENSIONS PER ASME Y14.5M-1994
THIRD ANGLE PROJECTION
DIMENSIONS ARE IN MILLIMETERS

SI METRIC A1

PART NO.	DRAWING NO.	REV.
INTERNAL	TWA052_SVC	NA

DO NOT SCALE | SCALE: 0.630 | SHEET: 1 OF 1

PROPRIETARY NOTICE:
THIS DOCUMENT CONTAINS CONFIDENTIAL AND PROPRIETARY INFORMATION OF HIGH END SYSTEMS INC., (ALSO DBA LIGHTWAVE RESEARCH) AND IS GIVEN TO THE RECEIVER IN CONFIDENCE. THE RECEIVER ACCEPTS AND AGREES THAT, EXCEPT AS AUTHORIZED BY HIGH END SYSTEMS, THE RECEIVER WILL NOT PERMIT THE USE OF THE DOCUMENT OR ANY COPY THEREOF OR THE INFORMATION THEREIN, WILL NOT COPY OR PERMIT COPYING THE DOCUMENT WILL NOT DISCLOSE TO OTHERS EITHER THE DOCUMENT OR THE INFORMATION THEREIN, AND WILL UPON COMPLETION OF THE NEED TO RETAIN THE DOCUMENT, OR UPON DEMAND, RETURN THE DOCUMENT WITHOUT RETAINING ANY OF THE INFORMATION CONTAINED THEREIN IN ANY FORM WHATSOEVER.